OPERATOR'S HANDBOOK

INSTALLATION AND OPERATING INSTRUCTIONS

for

STEPTOE SHAPERS

including

REPAIR PARTS LIST

WESTERN MACHINE TOOL WORKS
Holland, Michigan, U. S. A.

OPERATOR'S HANDBOOK

INSTALLATION
AND OPERATING
INSTRUCTIONS

for

STEPTOE SHAPERS

including

REPAIR PARTS LIST

WESTERN MACHINE TOOL WORKS
Holland, Michigan, U. S. A.

The Serial Number of this Machine is

_____

INSTALLATION AND OPERATING INSTRUCTIONS FOR STEPTOE SHAPERS

Moving the Machine

Remove all crating and waterproof wrapping paper from machine; also lagscrews holding machine base to skids.

Pass rope slings around rear projection on column and under projection at front of machine directly adjacent to under side of ram sliding surface. Care should be taken to avoid lifting with slings under ram, and adequate protection provided to prevent bruising of finished surfaces if chain slings are used. If crane service is not available, rollers may be used under the machine base, being careful to avoid all unnecessary shocks due to dropping off rollers.

Foundation

A solid concrete foundation, of a depth to provide a firm base for the machine, and with foundation bolts grouted into place, is recommended wherever possible. Bolt locations can be obtained from a certified foundation plan, and should be provided with ample clearance around them to make easy positioning of the machine in its location. Level machine with a reliable spirit level, parallel, and at right angles to direction of ram travel before grouting into place.

Cleaning

Clean off all slushing compound with kerosene or any reliable petroleum solvent. Refrain from moving any part of machine until all bearings not provided with automatic lubrication have been oiled and are ready for operation. On machines with Automatic Forced Feed Lubrication, add oil through the elbow filler cup, located in rear side of base, until oil stays in cup. Use Atlantic Red Machine Oil (Standard Oil Co.) or its equivalent.

Automatic Forced Feed Lubrication

When so ordered, Automatic Forced Feed Lubrication is provided to major points of wear on rotating or reciprocating parts, such as

Timken bearings, closures, ramways, rocker arm block, crank pin, gears, etc. No attention or maintenance is required except, before starting the machine in the morning, to see that the elbow filler cup, located in rear of base, is filled with oil. After a long period of time, renew the filter element on the left side of the machine column. A pressure gauge is visible from the operator's side to indicate the oil pressure in the oiling system, and being set at the factory to the proper pressure (3 pounds per square inch), requires no maintenance. Should this gauge fail to function at any time, the machine should be stopped immediately and the source of trouble located before resuming operations. Any oil additions made to the pumping supply should be Atlantic Red Machine Oil, or its equivalent.

Plain Lubrication

When so ordered, plain oil cup lubrication is provided. These oil cups, conspicuously placed at intervals on the machine, should be supplied with Atlantic Red Machine oil, or its equivalent, every working shift. In addition, miscellaneous points of wear on all machines should receive periodic lubrication attention, such as: elevating and horizontal traverse screw; column and crossrail sliding ways; table support slide and tool slide.

The four oil distributing pipes protruding from the top of the ram at the locking handle, should all receive shots of oil frequently during the machine's daily operation. The ram sliding block and the rocker arm shaft near the base of the machine should be well oiled periodically on every shift, through door on rear of machine.

Gear box is provided with suitable amount and quality of grease at factory, but should any additions be desirable, spindle grease No. 4473, by Viscosity Oil Co. of Chicago, or its equivalent, is recommended. Refill to a level so that largest gear just dips into the grease, or approximately four pints. Do not overfill, or bearing overheating and leakage may result. Whenever plain bearing motors are used, drain and refill their bearings about twice a year.

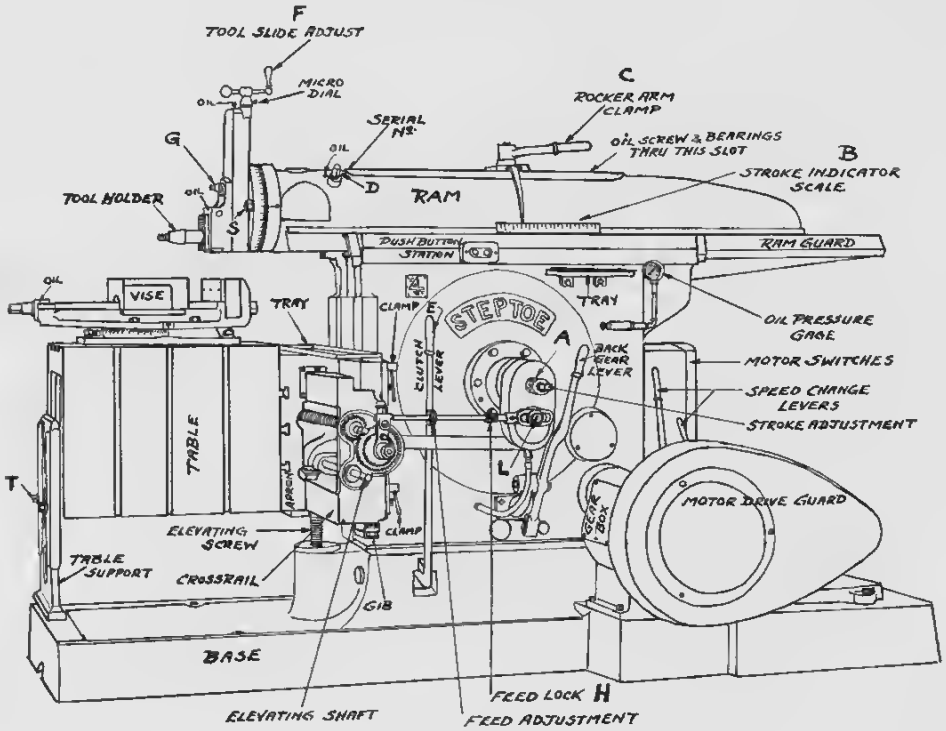

Fig. 1
Front View of Steptoe Shaper

Ram Stroke Adjustment

Loosen knurled knob at A (Fig. 1), place crank on squared shaft, and rotate in either direction until desired ram stroke is indicated on scale B, by pointer attached to clamp handle C. It may be done with machine in motion or at rest. To regulate stroke of ram across vise top, loosen clamp lever at C, place crank on squared shaft at D, and rotate in either direction until desired setting is obtained. Clamp in position with lever C. To test suitability of tool setting, ram may be jogged by operating clutch lever E intermittently.

Tool Slide Adjustment

Loosen tool slide lock on left hand side of tool slide (Fig. 2), and rotate slide adjustment handle F in suitable direction. When required the micrometer collar may be set to zero by loosening knurled lock screw in collar and setting to scribed zero line. For angular settings of clapper block, loosen clamp screw at G, and rotate block to setting

required. For angular settings of tool slide, loosen screws at S and rotate head to graduation desired. Be sure to tighten all clamp bolts before using tools.

Feed Adjustment

Place ram in operation by pulling clutch lever E (Fig. 3) away from machine; loosen feed lock nut at H and rotate feed adjustment collar until desired ratchet displacement is obtained. See feed index

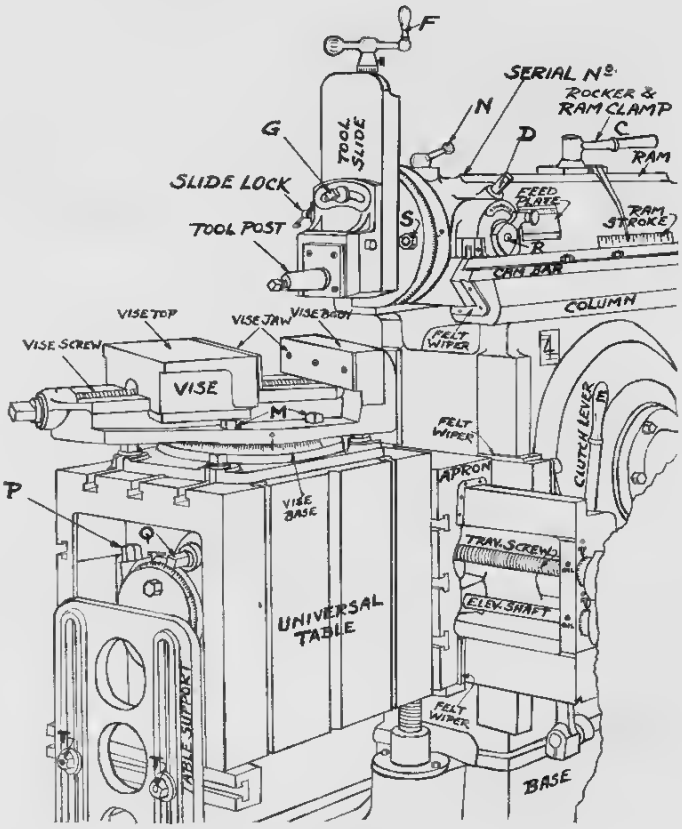

Fig. 2
Universal Table and Power Down Feed

plate on machine. Lock setting before continuing in operation to prevent mechanism getting out of adjustment. To disengage table feed without disturbing setting, pull up on knob K and give a 90° turn, snapping back into neutral position; to reverse direction of table feed, pull up on knob K and give a 180° turn, then let snap into position in slot.

For manual positioning of table and vise horizontally, first place power feed in neutral as before, and rotate traverse screw by square shaft and crank handle provided. For manual vertical positioning, rotate elevating shaft in desired direction by squared shaft and crank as before. To raise table by power feed, remove pull pinion on traverse screw and place same on elevating shaft, directly below it, and engage feed at K, similarly to horizontal feed. Before operating vertical feed, be sure saddle clamp bolts are loose enough to prevent clamping, also; when so provided, loosen two clamp screws on front of table support at T (Fig. 1).

The Machine is shipped with the feed mechanism adjusted to feed on the return stroke of the ram. Should it be desirable to feed on the forward stroke of the ram, operator should pull out on knob L (Fig. 1), while machine is running, then immediately let it snap back, from

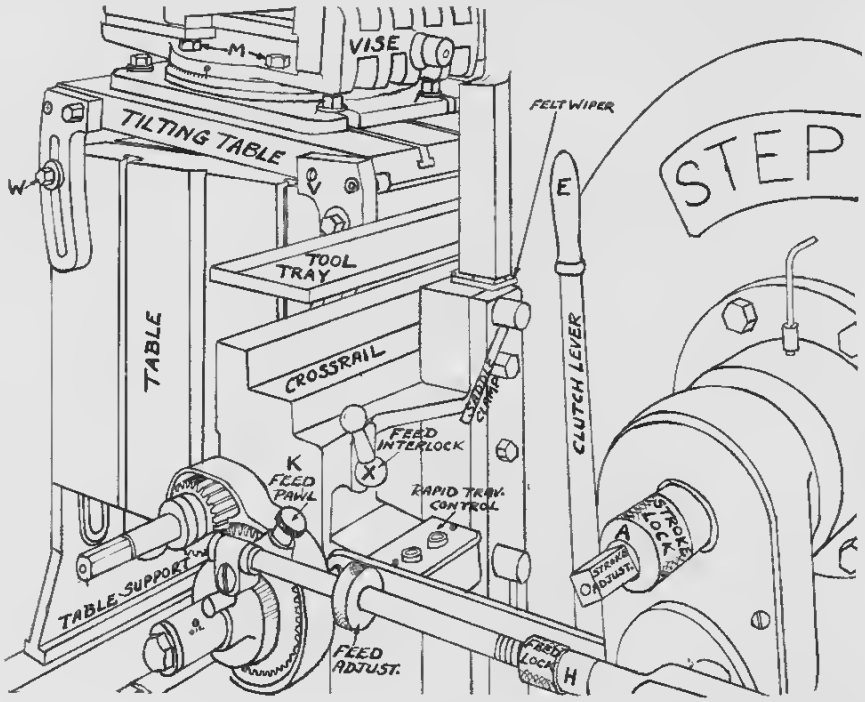

Fig. 3
Tilting Table and Rapid Traverse Control

where it will take up the proper position on the eccentric, automatically. If this adjustment is made while machine is stationary, knob L is pulled out as before, and rotated through 180° on the feed eccentric, and plunger inserted in hole provided.

Speed Changing

Whenever it becomes necessary or desirable to change ram speeds, either through the back gears or the speed box, it is recommended that the clutch be thrown out during the shifting process, allowing the machine to coast momentarily. By judicious "inching" of the clutch lever and the gear shift lever involved, concurrently, unnecessary clashing of gear teeth is avoided and the desired speed change accomplished in a minimum time.

Vise Adjustment

Loosen four clamp bolts at M (Fig. 2), and rotate vise to desired angular position indicated on circular graduated base. Tighten clamping bolts before using tools.

Power Down Feed

To place power down feed in operation, first adjust cam bar (Fig. 2) by slot and clamp screws provided, so that inclined front edge contacts roller as ram reciprocates, then rotate handle N (Fig. 2), to right or left from its central neutral position, after first unclamping tool slide lock. Select desired feed from plate provided and mounted on ram adjacent to index lever; then place index lever R in necessary location. Feed is automatic, and may be reversed in direction by moving handle N through a partial turn; or stopped, by placing index pin at R in hole No. 9.

Universal Table

Loosen table support clamping bolts T and trunnion clamp bolt at P (Fig. 2). Rotate squared shaft at Q with crank provided until desired angular setting is indicated by pointer. Tighten bolt P before placing tools in operation, to preserve setting.

Tilting Table Top

Remove two cap screws V from wing brackets as indicated in Figure 3, at the end about which the table top is to pivot; loosen bolts W on opposite sides of the table and pivot table to desired angular setting. Clamp in position by tightening bolts at W before using.

Power Rapid Traverse

Place feed interlock lever X (Fig. 3) in correct angular position, throwing feed pinion on traverse screw out of operation and making

push button station operable for starting motor. Table continues to traverse in selected direction as long as "forward" or "reverse" push button is pressed down. Two safety limit switches, underneath cross rail, stop table at either end to prevent damage to mechanism. If table over-travels, it may be returned to its field of operation on the crossrail by pressing the opposite push button.

Motor Drive

1. Vee Belt

The Vee belt drive generally supplied requires a minimum of attention and service. However after some initial service, an initial stretch may develop in the belts causing unnecessary looseness on the slack side. This may be easily and quickly taken up by moving the motor back on the base provided. An occasional shot of grease into the fittings of the large driven sheave hub, with the pressure gun provided, is all the attention required. Keep all lubrication or belt dressings off Vee belts, as they have a deteriorating effect on rubber, and shortens their long life. When the time comes for belt replacement, it is recommended that a complete new set of belts, matched for length, be obtained. To replace belts, slide motor forward on its base and remove old belts. Do not try to replace belts by prying over sheaves without first moving motor forward. When new belts are in position, take up slack by moving motor rear-ward on its base, by means of screw adjustment.

CAUTION — Care should be exercised in replacing belts or taking up slack on old ones. The screw adjustment gives a powerful means for this purpose and unless discretion is used, irreparable damage can result from too great an initial tension being imposed on the belts.

2. Geared Motor Drive

When so ordered a geared motor drive is provided, through a non-metallic pinion on the motor shaft. No adjustment is provided or necessary on this type, and no maintenance except occasional greasing — i.e. every three or four months — of the large mating gear, is required.

NOTE — Always include machine size and serial number, found on top surface of ram adjacent to D, Figure 1, in all inquiries or repair orders.

REPAIR PARTS LIST

NOTE: — When ordering parts, specify parts wanted by name and number, size and serial number of machine for which they are intended. Serial number is located on top of Ram.

1. Bull Gear Block.
2. Bull Gear Bushing.
3. Base.
5. Bull Gear.
7. Door Catch.
8. Gear Box and Column Bushing.
9. Ram.
11. Column.
16. Back Gear Shifter Handle (not shown).
17. Ram Block Handle.
18. Clutch Control Handle (not shown).
20. Door.
21. Gear Box Cover.
22. Door Knob.
30. Bull Gear Shaft.
31. Feed Yoke Cover.
32. Feed Yoke.
33. Back Gear Shaft — Motor Drive.
34. Single Gear Shaft — Motor Drive.
35. Back Gear Shaft — Cone Pulley Drive.
36. Single Gear Shaft — Cone Pulley Drive.
37. Input Shaft and Ball Bearing.
38. Bull Gear Pinion Shaft.
39. Back Gear — Large.
40. Back Gear — Small.
41. Bull Gear Roller Bearings.
43. Column Bushing Oil Seal.
44. Bull Gear Bearing Lock Nut.
45. Vee Belt Sheave — Driven.
47. Vee Belt Guard.
48. Ram Block Washer.
50. Rocker Arm.
51. Friction Clutch Complete.
52. Rocker Arm Block.
53. Ram Screw Nut.
54. Feed Gear on Bull Gear.
55. Clutch Cover.
60. Ram Block.
73. Back Gear Shifter Bracket, R.H.
74. Back Gear Shifter Fulcrum.
75. Back Gear Shifter Shaft.
76. Back Gear Shifter Bracket, L.H.
83. Back Gear Shifter (not shown).
104. Sleeve Gear.
107. Stroke Index Pointer.
120. Gear Box.
121. Gear Box Pad.
122. Crank Pin Washer.
128. Shift Handle Fulcrum Stud (not shown).
134. Apron.
138. Constant Speed Pulley (not shown).
151. Ram Gib.
159. Rocker Arm Shaft Collar.
207. Bull Gear Shaft Bushing.
212. Crossrail Slat.
213. Connecting Rod (not shown).
214. Bull Gear Screw.
221. Bull Gear Pinion.
251. Column Bearing Cover — L.H.
262. Back Gear Cover.
360. Felt with Housing.
361. Tapered Roller Bearing.
362. Tapered Roller Bearing.
363. Felt with Housing.
367. Bearing Lock Nut.
368. Bearing Lock Nut.
369. Bearing Lock Nut.
385. Motor Pinion (when ordering, give hole dia., keyway size and approx. outside diameter).
390. Vee Belt Motor Sheave (give hole dia., No. of grooves, belt size and length, keyway and approx. outside dia.).
396. Clutch Control Shaft and Link.
401. Bull Gear Block Slat.
402. Back Gear — Small.
406. Bull Gear Bevel Gear.
415. Ram Block Stud.
506. Ram Adjust. Shaft.
509. Ram Screw.
510. Ram Screw Bevel Gears.
512. Bull Gear Shaft Lock Nut.
519. Rocker Arm Tension Bolt.
525. Column Bearing Cover — R.H.
528. Clutch Control Shoe.
529. Clutch Control Shaft.
533. Ram Shaft Collar.
1474. Feed Index Plunger Knob.
1475. Feed Index Plunger.
1476. Feed Index Plunger Housing.
1477. Feed Eccentric.
1478. Guide Collar — Outside.
1479. Guide Collar — Inside.
1480. Eccentric Feed Gear.
1483. Feed Rod Link.
1499. Feed Eccentric Washer.
1763. Stroke Index Plate.

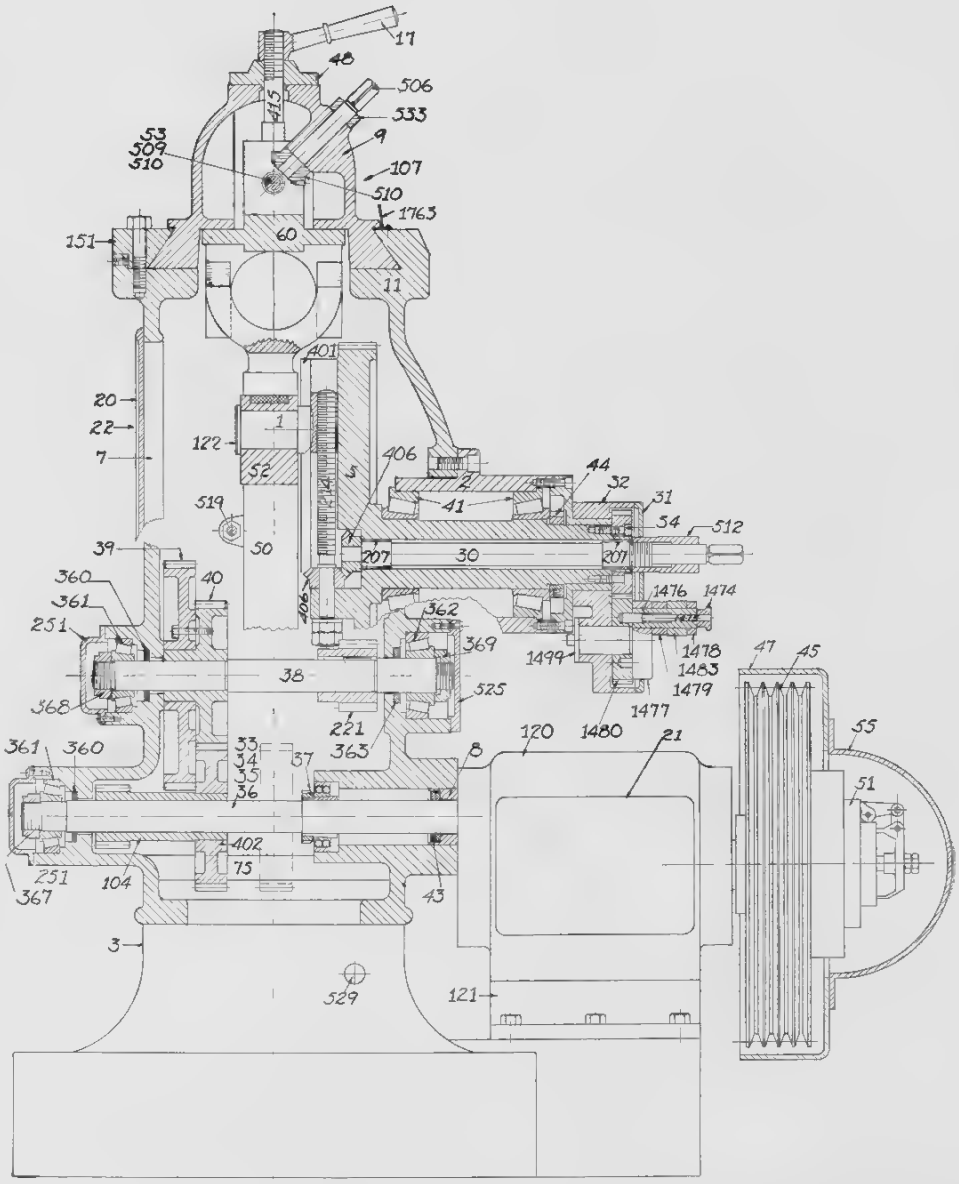

Fig. 4

Sectional View of Steptoe Shapers

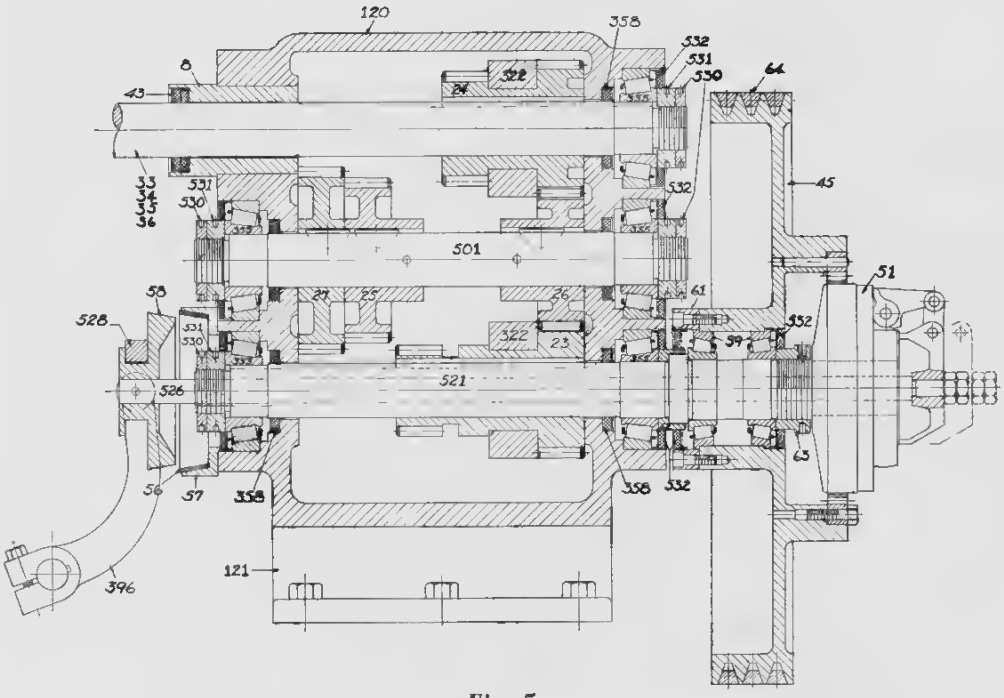

Fig. 5

Sectional View of Speed Box on Steptoe Shapers

8. Gear Box and Column Bushing.
23. Sleeve Gear — Lower.
24. Sleeve Gear — Upper.
25. Intermediate Shaft Gear — Center.
26. Intermediate Shaft Gear — Small.
27. Intermediate Shaft Gear — Large.
33. Back Gear Shaft — Motor Drive.
34. Single Gear Shaft — Motor Drive.
35. Back Gear Shaft — Cone Pulley Drive.
36. Single Gear Shaft — Cone Pulley Drive.
43. Column Bushing Oil Seal.
45. Vee Belt Sheave — Driven.
51. Friction Clutch Complete.
56. Brake Lining.
57. Brake Drum.
58. Brake Cone.
59. Tapered Roller Bearings Driven Sheave.
61. Oil Seal Retainer.
63. Bearing Adjusting Nut.
64. Vee Belts (state size, length, and number required).
120. Gear Box.
121. Gear Box Pad.
322. Sleeve Gear Shifter.
355. Tapered Roller Bearings.
358. Gear Box Oil Seal — Inner.
396. Clutch Control Shaft Link.
501. Intermediate Gear Box Shaft.
521. Gear Box Clutch Shaft.
526. Clutch Control Rod.
528. Clutch Control Shoe.
530. Lock Nut — Thin.
531. Lock Nut — Thick.
532. Gear Box Oil Seal — Outer.

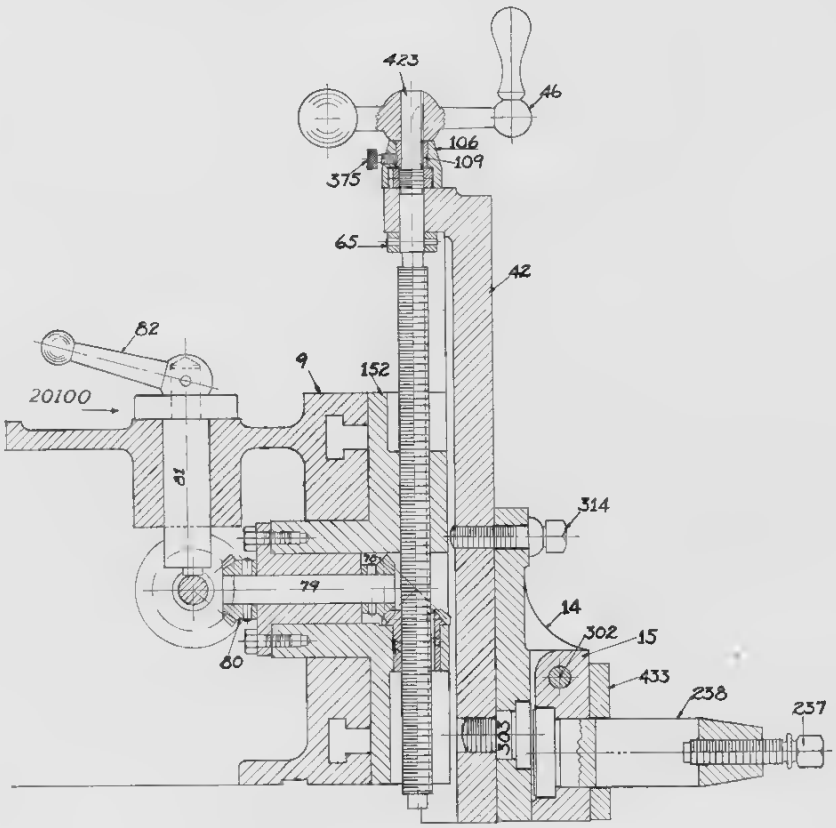

Fig. 6

Sectional View of Tool Slide on Steptoe Shapers

9. Ram.
14. Clapper Box.
15. Clapper Box Block.
42. Harp Slide.
46. Harp Slide Screw Handle.
65. Harp Slide Screw Collar.
77. Power Down Feed Mitre Gear.
78. Power Down Feed Mitre Gear.
79. Power Down Feed Mitre Shaft.
80. Power Down Feed Bevel Gear.
81. Power Down Feed Control Shaft.
82. Power Down Feed Control Handle.
106. Tool Slide Micro Collar.
109. Micrometer Collar Bushing.
152. Harp.
237. Tool Post Screw.
238. Tool Post.
302. Clapper Box Taper Pin.
303. Clapper Box Swivel Bolt.
314. Clapper Box Clamp Bolt.
375. Micro Collar Screw.
423. Tool Slide Screw.
459. Tool Slide Gib.
20100. Clutch Shifter Detent Plate.

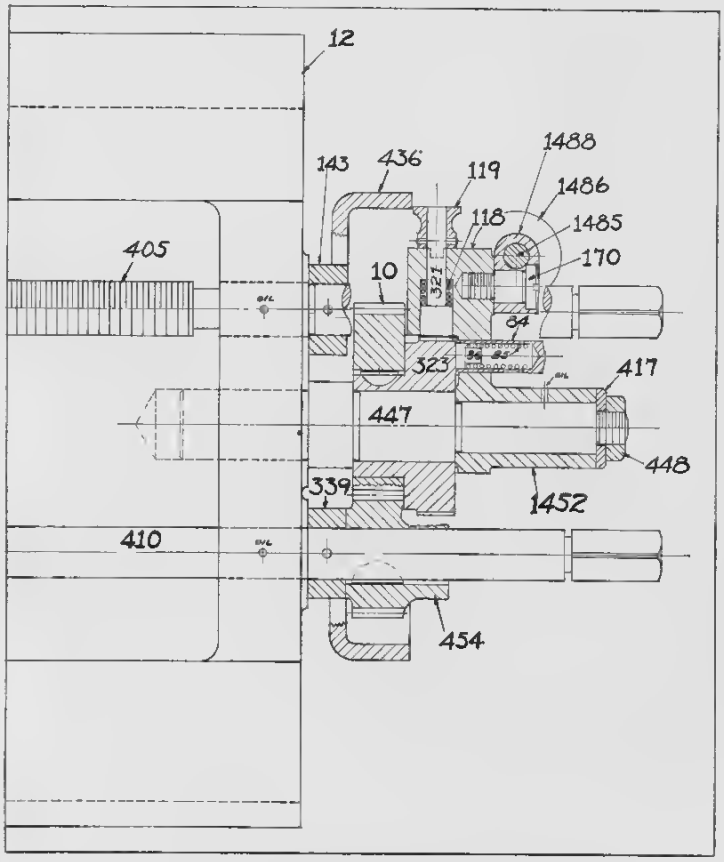

10. Feet Ratchet Gear.
12. Crossrail.
49. Apron Nut (not shown).
67. Table.
68. Telescopic Screw (not shown).
84. Pawl Friction Thimble.
85. Pawl Friction Spring.
86. Pawl Friction Plunger.
118. Feed Pawl Spring.
119. Feed Pawl Knob.
123. Elevating Screw Nut.
126. Gear Box Shifter Handle Upper.
127. Gear Box Shifter Handle Lower.
143. Micro Collar on Screw.
170. Feed Pawl Stud.
321. Feed Ratchet Pin.
323. Feed Ratchet.
328. Crossrail Bevel Gear.
329. Crossrail Bevel Gear.
339. Micro Collar on Elev. Shaft.
403. Elevating Bevel Gear Cover.
404. Feed Screw Thrust Washer.
405. Table Feed Screw.
410. Elevating Shaft.
411. Elevating Screw (not shown).
417. Washer.
436. Feed Gear Guard.
447. Feed Pawl Shaft.
448. Feed Pawl Shaft Nut.
454. Feed Slip Gear.
1452. Feed Pawl Housing (parts not sold separately).
1485. Feed Rod.
1486. Feed Adjusting Knob.
1487. Feed Rod Collar.
1488. Feed Rod Elbow.

Fig. 7

Sectional View of Feed Mechanism on Crossrail of Steptoe Shapers

Following Parts not illustrated, but whose location on machine is evident:

4. Apron Slat — Lower.
13. Crossrail Slat — Rear — R.H.
13. Crossrail Slat — Rear — L.H.
19. Crossrail Locking Screw — R.H.
19. Crossrail Locking Screw — L.H.
452. Apron Taper Gib.
459. Tool Slide Gib.
461. Rocker Arm Shaft.
462. Oil Filter Unit.
463. Oil Relief Valve.
464. Oil Pump.
465. Pump Sprocket — Driven.
466. Pump Sprocket — Driver.
468. Pump Drive Chain.
515. Table Support.
516. Table Support Bolt.
517. Table Support Washer.
1464. Tongue for Vise Base.
1468. Vise Screw Collar.
1469. Square Head Bolt.
1471. Washer.
1472. Swivel Bolt.
1624. Vise Screw Washer.
1675. Vise Screw Lock Nut.
1677. Movable Vise Jaw.
1678. Vise Slat.
1679. Vise Adjusting Screw.
1680. Vise Base.
1681. Vise Gib.
1682. Vise Body.
1683. Vise Clamp Bolt.
1684. Vise Jaw Facings.
2077. Vise Swivel Stud.
2567. Motor Drive Gear Cover.
2572. Elevating Screw Thrust Bearing.

For Cone Pulley Drive Machines:

27. Roller Bearing Housing.
101. Spacing Collar and Housing.
271. Housing Cover.
364. Felt with Housing.
365. Tapered Roller Bearing.

Printed in U. S. A.
No. 4220-H